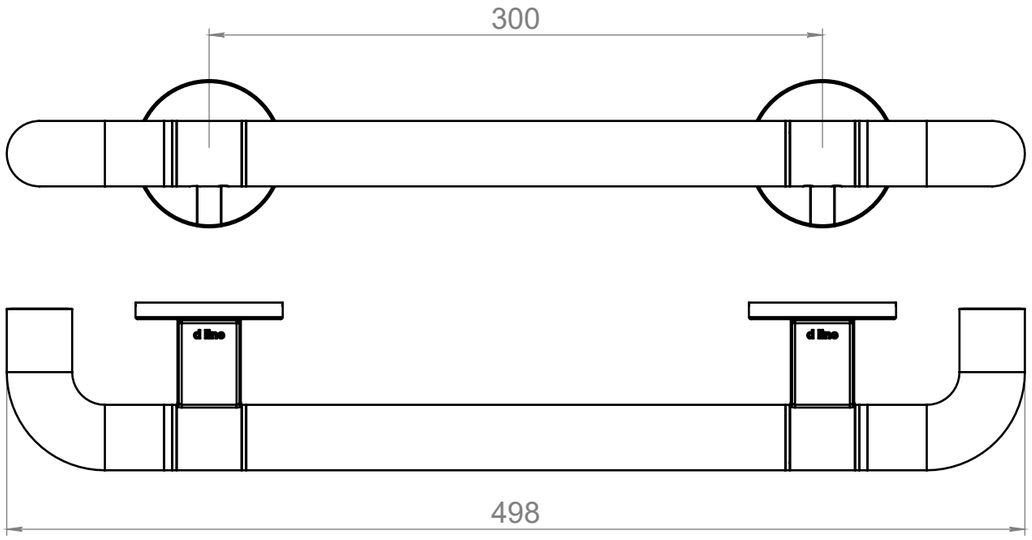

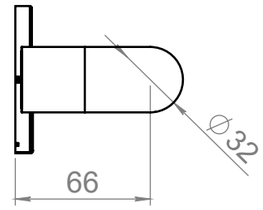

H (1 : 1)

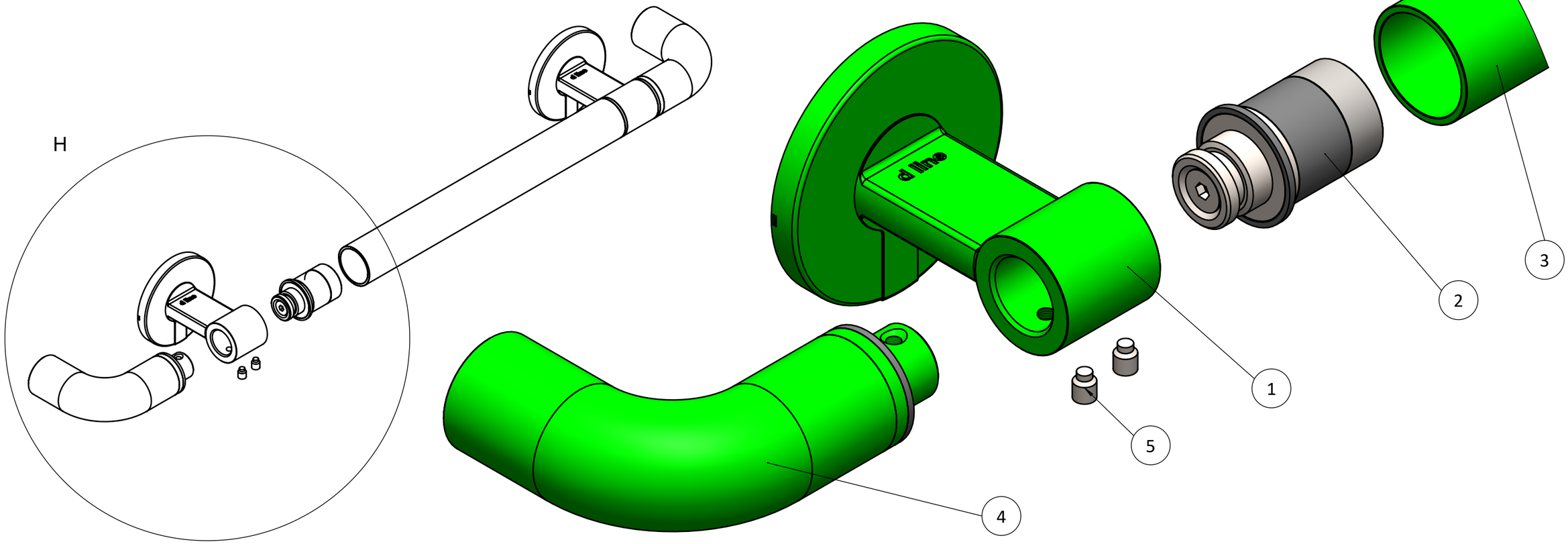

ITEM NO.	PART NUMBER	DESCRIPTION	QTY.
1	14.7514.02.000	Bracket with cover	2
2	14.7514.02.010	Conection unit	2
3	14.7514.02.300	Tube	1
4	14.7514.02.030	Bend end	2
5	DIN 915 - M6 x 8-N	Grub screw	4

1. * Information dimension.
2. Parts marked in green shoud be painted, if painting needed.

Subject: Grab Bar Set, Bend End
Grab bar

Mass: g

Scale: 1:3

SHEET 1 OF 1

Material:

Category: BF

Sign: ALJ

Date: 2017-05-14

Latest release:

Release date:

Drawing no.: **14.7510.02.302**

d line
KNUD HOLSCHER DESIGN

Dimension without tolerance, follows DS/ISO 2768-mK.
This drawing is the property of d line a/s, and is not to be copied or shown to third parties.